Data Sheet

Article number: 29560329385220
Description: Shaft mounted gear
A313S-293,8-P63B5

Measures

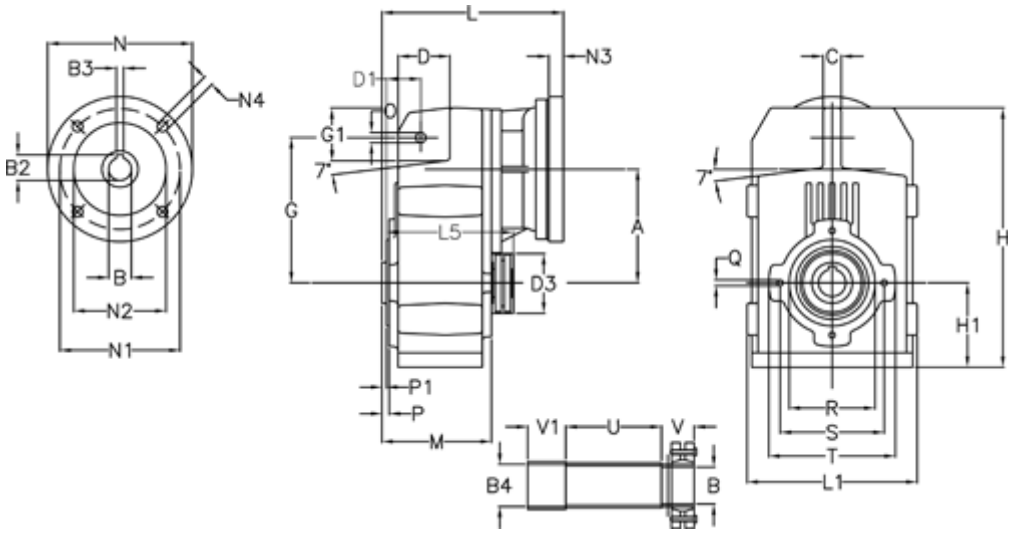

A = 150.50	D1 = 54.0	l5 = 180.0	P1 = 3.5	V1 = 42
B = 36	d3 = 90	M = 125.0	Q = M10x17	
B1 = 11	G = 170	N = 140	R = 110	
B2 = 12.8	G1 = 84.0	N1 = 115	S = 130	
B3 = 4	H = 326.0	N2 = 95	T = 150	
B4 = 38	H1 = 102.0	N4 = M8x19	Tightening torque N m = 14.5	
C = 20	L = 225.5	O = 13	U = 73.0	
D = 68.0	L1 = 210	P = 6.5	V = 42	

Product drawings and brochures of any kind may contain errors for which Brd. Klee A/S cannot be liable.